TERRA NOVA

WILD COUNTRY by Terra Nova

Product Guide

spring summer 2022

Contents

Terra Nova® Tents	6 - 35	Bivi Bags	66 - 69
Terra Nova® Tents at a Glance	36 - 37	Tarps	70 - 71
Materials & Technology	38 - 39	Bothy Bags	72 - 75
Wild Country™ Tents	40 - 61	Tent Accessories	76 - 79
Wild Country™ Tents at a Glance	62 - 63	Trekking Poles	80 - 81
Materials & Technology	64 - 65	Sales Support	82 - 83

TERRA NOVA

Terra Nova Equipment has a long history of producing some of the world's best outdoor gear, gear which is tried and tested in our laboratory and in some of the most extreme environments on the planet. Our 'Best in Class' design ethos drives an ambition to develop and use some of the best components and materials available. We are leaders in materials research and innovation, continuously looking to create and use fabrics that are unique in the outdoor industry. The result is award winning products which enable outdoor enthusiasts to achieve their goals. Terra Nova® is the brand of choice for most outdoor professionals across the globe. The Terra Nova® brand has its heritage in mountain tents including the iconic Quasar. However, the last 15 years has seen it established as the leader in the design and development of extremely lightweight gear, including the lightest tents in the world.

WILD COUNTRY by Terra Nova

Wild Country camping products from Terra Nova Equipment are designed for customers seeking the perfect combination of reliability, simplicity of use and great value. Taking some of the design and quality standards from the Terra Nova® brand, products, which now include inflatable tents and awnings, are used by everyone from the serious user to first time campers and families to escape into the outdoors.

THE JOURNEY

Innovation At Heart

Continuous pioneering development of award winning products

1980 – Geodesic tents & GORE-TEX® bivi bags made by Wintergear

1982 – First thermal gloves produced

1983 – Quasar tent introduced

1986 – Wintergear bought by Wild Country Ltd

1993 – Terra Nova Equipment Ltd formed following de-merger of Wild Country Ltd. Extremities brand also acquired.

1994 – Introduction of Watershed the first PU / silicone coated flysheet fabric in the industry

1999 – Terra Nova Equipment launches Wild Country range of tents

2000 – Terra Nova Equipment Ltd acquired by Hubaco Ltd

2004 – Sleeping bags launched

2005 – World's first sub 1kg tent, the Terra Nova LaserLite launched. First Guinness World Record for the lightest tent in the world. Silver European IF award.

2007-2010 – Introduction of FLO2 air permeable GORE-TEX® membrane in bivi bags

2009 – Rucksacks launched

2012 – 3 further Guinness World Records

2016 – First to use bonded seams in commercially produced tents with the launch of the Terra Nova Voyager Ultra 2.

2017 – Launch of Terra Nova Southern Cross tents – completely free standing, 4 season design. OIA award winner.

2017 – Acquired Field Candy brand

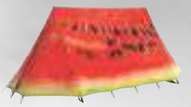

2017 – Starlite tents with short packed length launched

2018 – Cycling packs introduced

2019 – Laser Compact 2 OIA award winner

2020 – Inflatable tents launched. Compact tents launched in Wild Country range.

UK Design & Production

Designed and selected manufacturing at our Derbyshire factory since the 1980s

UK After Sales

Repair, advice and bespoke expertise all from our British headquarters since the 1980s

Terra Nova Tent Range Explained

The Terra Nova tent range is divided into 5 series:

ULTRA Series

This series comprises cutting edge products which push development boundaries with the latest technologies. Created using state of the art construction methods and designs and tailored to provide the lightest solutions possible.

Target User: The outdoor athlete wanting the latest technology and lightest weight kit so they can achieve their best performance.

Use: Adventure racing, mountain marathons, 1-2 night 3 season backpacking trips.

Superlight Series

Designed to create extremely lightweight products balanced with strength and durability. Achieved using both 7 and 10 denier nylon 6.6 ripstop flysheet fabrics with a maximum tear strength of 6kg.

Target User: The outdoor enthusiast wanting extremely lightweight kit for short to medium length trips, events and activities.

Use: Mountain marathons, 3 season backpacking.

Lightweight Series

This series includes designs which have become the industry blueprint for lightweight tent design, winning numerous awards and used worldwide. Models offer a good balance of durability and low weight using a 20 denier nylon ripstop flysheet fabric.

Target User: The outdoor enthusiast looking for a good balance of weight, durability and space.

Use: Medium duration 3-4 season backpacking trips, trekking. Activities where low weight is still important.

Classic Series

The tents provide tried and tested lightweight performance. This series includes spacious models suitable for year round use.

Target User: Those looking for a good all-round lightweight tent that can be used across a whole range of activities throughout the year. Prepared to accept a slightly heavier weight (than tents in the Lightweight Series) for more space and strength.

Use: 4 season trekking and backpacking. Longer duration trips.

UK Made Expedition Series

Using our most durable flysheet fabrics and made in the UK, this series gives peace of mind to those who may experience severe weather when travelling to the most remote parts of the world.

Target User: Mountaineers and expedition groups.

Use: 4 season expeditions, mountain use and long duration adventures.

Series	Specification		
	Flysheet	Groundsheet	Poles
ULTRA Series	**ULTRA** 10000mm HH UHMWPE	**Watershed Si2** 2000mm HH Nylon 3000mm HH Nylon	DAC
Superlight Series	**Watershed Si2** Pulse: 7 denier 1500mm HH Nylon Photon: 10 denier 2000mm HH Nylon	**Watershed Si2** 2000mm HH Nylon 3000mm HH Nylon	DAC
Lightweight Series	**Watershed Si2** 20 denier 3000mm HH Nylon	**Waterbloc** 7000mm HH Nylon	DAC Terra Nova Reflex
Classic Series	**Watershed** 30 denier 5000mm HH Nylon	**Waterbloc** 10000mm HH Nylon	DAC Terra Nova Reflex
UK Made Expedition Series	**Watershed** 70 denier 7000mm HH Nylon	**Waterbloc** 10000mm HH Nylon	Terra Nova Reflex

THE LIGHTEST TENTS

In 2004 Terra Nova Equipment set the benchmark for lightweight tent development when it launched the world's first sub 1kg tent. A Guinness World Record marked the achievement of creating the lightest tent in the world.

The development of new materials and use of fabrics not previously used on a commercial scale in tent production has allowed Terra Nova Equipment to slice more weight off its record breaking tents and achieve 3 further world records for the lightest tent.

In its quest to use new materials Terra Nova Equipment also pioneered the use of bonded seams in ultra-light tents starting with the Voyager Ultra 2 in 2012, a semi-geodesic, 2 person model weighing just 1kg and made using the extremely lightweight ULTRA fabric.

The lightest tent is currently the Laser Pulse Ultra 1 which not only has a minimum weight of 450g but a tiny pack size of just 30cm x 9cm, making it extremely packable for ultra events.

TERRA NOVA

ULTRA Series

The cutting edge products within the Terra Nova ULTRA series push development boundaries with the latest technologies. Created using state of the art materials, construction methods and designs. The range includes the lightest tents in the world, devised for those who want to save every gramme of weight. Each model is tailored to provide the lightest solution possible.

Laser Pulse Ultra 1

One of the lightest double-wall shelters in the world

- Uses our extremely light ULTRA fabric
- Compatible with our FASTPACK system
- Alloy end pole included for super-light weight
- Inner height 82cm
- 30cm pack length

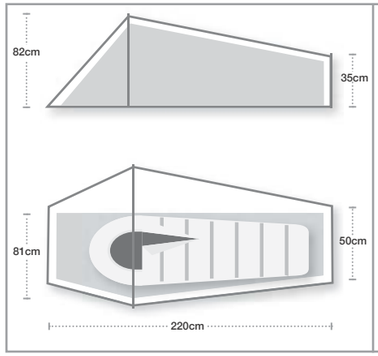

FOOTPRINT AVAILABLE

SLEEPS	WEIGHT MIN	WEIGHT MAX	RANGE	PACK SIZE
1	450g 15.9oz	490g 1lb 1oz	3	30x9cm

Flysheet	ULTRA 10000mm
Floor	Watershed Si2 R/S 2000mm
Main Pole	8.7mm DAC NFL
End Pole	7mm TN Reflex Alloy
Pegs	8 x Titanium 1g
Guylines	3 x Dyneema Reflective
Inner Door	Half Mesh

DAC

GREEN Anodizing

Minimum weight includes flysheet, inner, and main pole.

Code: 43LPU1

Solar Ultra 2

The lightest 2 person free-standing tent in the world

- The lightest 2 person free-standing tent currently available
- Ideal for mountain marathon events or short duration backpacking trips
- Super strong, factory bonded seams
- Uses our extremely lightweight ULTRA fabric
- Compatible with our FASTPACK system

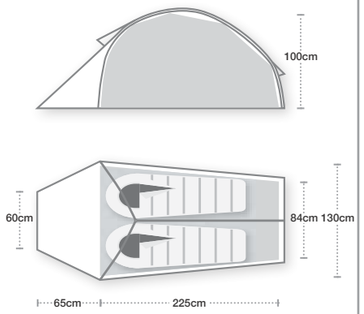

FOOTPRINT AVAILABLE

2	722g 1lb 9oz	772g 1lb 11oz	3	40x13cm
SLEEPS	WEIGHT MIN	WEIGHT MAX	SEASON	PACK SIZE

Flysheet	ULTRA 10000mm
Floor	Watershed Si2 R/S 3000mm
Poles	8.7mm DAC NFL
End Pole	7mm TN Reflex Alloy
Pegs	14 x Titanium 1g
Guylines	3 x Dyneema Reflective
Inner Door	Full Mesh

DAC

GREEN Anodizing

Minimum weight includes flysheet, inner, and main pole.

Code: 43SU2

TERRA NOVA

Voyager Ultra 2

- The classic Voyager design in ULTRA form
- All bonded seams on flysheet
- Over 50% lighter than the standard Voyager
- Maximum stability for a minimum weight
- Half mesh inner door for better ventilation

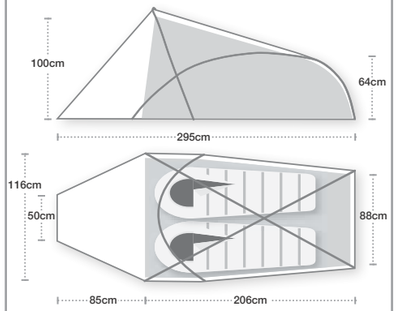

FOOTPRINT AVAILABLE

2	1000g 2lb 3oz	1050g 2lb 5oz	3	48x13cm
SLEEPS	WEIGHT MIN	WEIGHT MAX	SEASON	PACK SIZE

Flysheet	ULTRA 10000mm
Floor	Watershed Si2 R/S 3000mm
Poles	8.7mm DAC NFL
Pegs	12 x Titanium 1g
Guylines	2 x Dyneema Reflective
Inner Door	Half Mesh

DAC

GREEN Anodizing

Minimum weight includes flysheet, inner, and main pole.

Code: 43VU2

Tarp Ultra 1

- Lightest weight tarp
- Reinforced eyelet positions and webbing tapes for flexible set up
- Ideal for use with Moonlite Bivi
- Uses extremely lightweight ULTRA fabric

1	490g 1lb 1oz
SLEEPS	WEIGHT

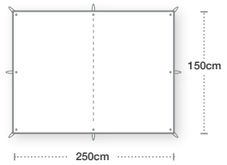

Superlight Series

The primary design objective for the Superlight Series is to create extremely lightweight products balanced with strength and durability. Terra Nova Equipment has achieved this by developing 7 and 10 denier nylon 6.6 ripstop flysheet fabrics with a maximum tear strength of 6kg.

Laser Pulse 1

One of the lightest double-wall shelters in the world

- One of the lightest double-wall shelters in the world (together with Laser Pulse Ultra 1)
- Uses 7 denier Watershed Si2 ripstop flysheet
- Compatible with our FASTPACK system
- Alloy end pole included for super-light weight
- Good sitting height 82cm for this type of tent
- 30cm pack length

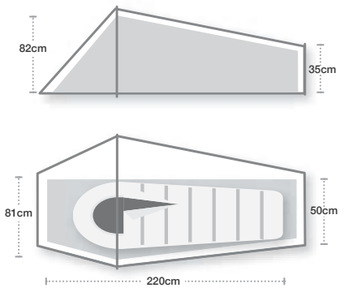

FOOTPRINT AVAILABLE

SLEEPS	WEIGHT MIN	WEIGHT MAX	SEASON	PACK SIZE
1	485g 1lb 1oz	525g 1lb 3oz	3	30x10cm

DAC GREEN Anodizing

Flysheet	Watershed R/S 7D Si 1500mm
Floor	Watershed R/S Si2 2000mm
Main Pole	8.7mm DAC NFL
End Pole	7mm TN Reflex Alloy
Pegs	8 x Titanium 1g
Guylines	3 x Dyneema Reflective
Inner Door	Half Mesh

UK OUTDOOR INDUSTRY AWARDS 2023 TENTS FINALIST

Minimum weight includes flysheet, inner, and main pole.

Code: 43LP1

Solar Photon 2

BEST IN CLASS

- Extremely lightweight 2-person self-supporting tent
- Compatible with our FASTPACK system
- Stable shape for use in poor weather
- Very easy to set up and use
- Front and rear fly hoods for great ventilation
- 1g Titanium pegs

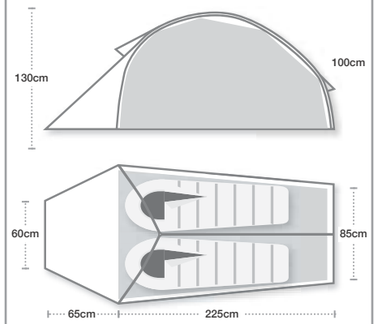

FOOTPRINT AVAILABLE

SLEEPS	WEIGHT MIN	WEIGHT MAX	SEASON	PACK SIZE
2	814g 1lb 12oz	849g 1lb 13oz	3	40x15cm

Flysheet	Watershed Si2 R/S 2000mm
Floor	Watershed Si2 R/S 3000mm
Poles	8.7mm DAC NFL
Pegs	14 x Titanium 1g
Guylines	3 x Dyneema Reflective
Inner Door	Full Mesh

DAC

GREEN Anodizing

Minimum weight includes flysheet, inner, and main pole.

Code: 43SP2

TERRA NOVA

Lightweight Series

This series includes styles which have become the industry blueprint for lightweight tent design, winning numerous awards and seen worldwide. 20 Denier Watershed Si2 silicone flysheet fabrics are used to provide a good balance of low weight and durability. Styles have been innovatively designed to reduce the number of seams over the inner for better weather protection.

Terra Nova has a comprehensive offering of lightweight tents with a packed length of 30cm or less. Most of the tents weigh less than 1.5kg and provide good head height and usable space.

The compact pack size embraces the trend in the outdoor industry towards products that pack down much smaller, providing more versatile carrying options for backpacking and the increasingly popular bike packing. Models include the award winning Laser Compact 2.

UK OUTDOOR INDUSTRY AWARDS 2019 WINNER TENTS/AWNINGS

UPDATED Laser Compact 1

SILICONE SEALED MAIN SEAM

- The modern day classic single person tent
- **Now with factory silicone sealed main seam**
- **Now supplied with Terra Firma Mini Pegs (P78)**
- Guylines attached directly to pole sleeve
- Multiple 'Best in Test' awards
- Compatible with our FASTPACK system
- Vents at both ends

FOOTPRINT AVAILABLE

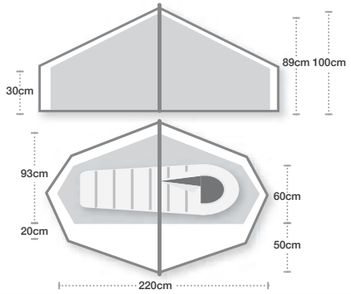

1-2	860g 1lb 14oz	970g 2lb 2oz	3	30x14cm
SLEEPS	WEIGHT MIN	WEIGHT MAX	SEASON	PACK SIZE

BEST IN TEST TREKKINGMOUNTAIN

Flysheet	Watershed Si2 R/S 3000mm
Floor	Waterbloc R/S 7000mm
Main Pole	8.7mm DAC NFL
End Pole	7mm TN Reflex Alloy
Pegs	10 x Terra Firma Mini 9g
Guylines	4 x Dyneema Reflective
Inner Door	Half Mesh

DAC GREEN Anodizing

Minimum weight includes flysheet, inner, and main pole.

Code: 43LCPT1V2

UPDATED Laser Compact 2

SILICONE SEALED MAIN SEAM

- Great mix of super low weight and space
- **Now with factory silicone sealed main seam**
- **Now supplied with Terra Firma Mini Pegs (P78)**
- Guylines attached directly to pole sleeve
- Two doors for improved access and ventilation
- Compatible with our FASTPACK system
- Vents at both ends

FOOTPRINT AVAILABLE

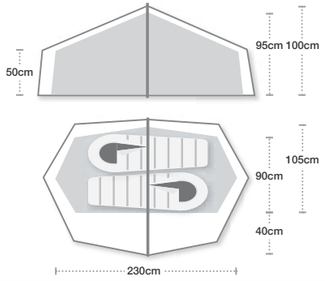

2	1.08kg 2lb 6oz	1.23kg 2lb 11oz	3	30x15cm
SLEEPS	WEIGHT MIN	WEIGHT MAX	SEASON	PACK SIZE

OUTDOOR RETAILER WINNER

HIGHLY COMMENDED TREKKINGMOUNTAIN

Flysheet	Watershed Si2 R/S 3000mm
Floor	Waterbloc R/S 7000mm
Main Pole	8.7mm DAC NFL
End Pole	7mm TN Reflex Alloy
Pegs	10 x Terra Firma Mini 9g
Guylines	4 x Dyneema Reflective
Inner Door	Half Mesh

DAC GREEN Anodizing

Minimum weight includes flysheet, inner, and main pole.

Code: 43LCPT2V2

Starlite 1

- One of the lightest tunnel tents currently available
- Packed length of only 29cm
- Corner buckle adjustment, good ventilation and easy to pitch
- Ideal for bike packing and backpacking

FOOTPRINT AVAILABLE

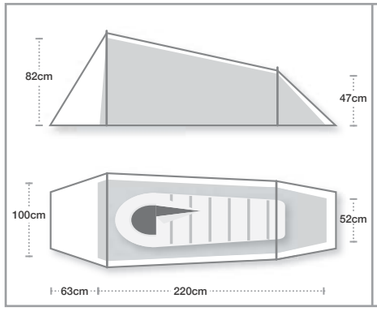

SLEEPS	WEIGHT MIN	WEIGHT MAX	SEASON	PACK SIZE
1	1.0kg 2lb 3oz	1.12kg 2lb 7oz	3	29x10cm

Flysheet	Watershed Si2 R/S 3000mm
Floor	Waterbloc R/S 7000mm
Poles	8.64mm TN Reflex
Pegs	9 x 7075 Alloy 11g
Guylines	3 x Dyneema Reflective
Inner Door	Third Mesh

TERRA 7001 T6 NOVA reflex

Minimum weight includes flysheet, inner, and main pole.

Code: 43SL1

Starlite 2

- Weighs just 1.53kg
- Huge porch and inner space
- Short packed length and versatile tent bag
- Ideal for bike packing and backpacking

FOOTPRINT AVAILABLE

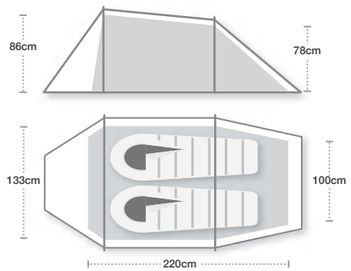

SLEEPS	WEIGHT MIN	WEIGHT MAX	SEASON	PACK SIZE
2	1.36kg 3lb	1.53kg 3lb 6oz	3	29x13cm

Flysheet	Watershed Si2 R/S 3000mm
Floor	Waterbloc R/S 7000mm
Poles	8.64mm TN Reflex
Pegs	11 x 7075 Alloy 11g
Guylines	5 x Dyneema Reflective
Inner Door	Third Mesh

Minimum weight includes flysheet, inner, and main pole.

Code: 43SL2

Classic Series

Tried and tested design and lightweight performance from Terra Nova tents. Models in the classic series have fully taped Watershed flysheets for complete waterproof protection and are designed for year round use.

Southern Cross 1

- Completely free-standing tent
- Flysheet-first pitching
- Spacious inner and porch
- 4 season performance
- Terra Nova Reflex poles

FOOTPRINT AVAILABLE

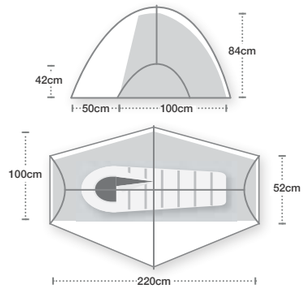

SLEEPS	WEIGHT MIN	WEIGHT MAX	SEASON	PACK SIZE
1	1.49kg 3lb 5oz	1.69kg 3lb 11oz	4	45x14cm

UK OUTDOOR INDUSTRY AWARDS 2015 TENTS FINALIST

Flysheet	Watershed R/S 30D Si/PU 5000mm
Floor	Waterbloc 10000mm
Poles	8.64mm TN Reflex
Pegs	11 x 7075 Alloy 11g
Guylines	4 x Dyneema Reflective
Inner Door	Half Mesh

TERRA 7001 T6 NOVA reflex

Minimum weight includes flysheet, inner, and main pole.

Code: 43SCR1

Southern Cross 2

- Completely free-standing tent
- Flysheet-first pitching
- Spacious inner and porches
- 2 doors and 2 porches
- 4 season performance
- Terra Nova Reflex poles

FOOTPRINT AVAILABLE

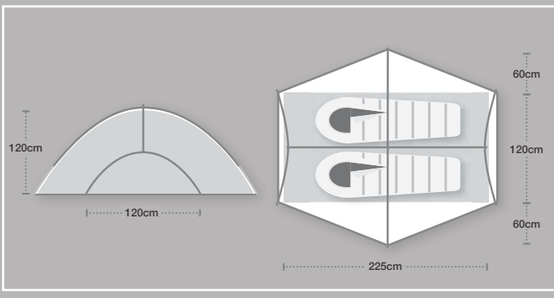

SLEEPS	WEIGHT MIN	WEIGHT MAX	SEASON	PACK SIZE
2	2.1kg 4lb 11oz	2.29kg 5lb 1oz	4	47x16cm

Best in Test Trail Magazine

Flysheet	Watershed R/S 30D Si/PU 5000mm
Floor	Waterbloc 10000mm
Poles	8.64mm TN Reflex
Pegs	10 x 7075 Alloy 11g
Guylines	4 x Dyneema Reflective
Inner Door	Half Mesh

TERRA 7001 T6 NOVA reflex

Minimum weight includes flysheet, inner, and main pole.

Code: 43SCR2

TERRA NOVA

UPDATED Laser Compact All Season 2

- All season version of the popular Laser model
- **Now supplied with Terra Firma Pegs (P78)**
- Uses the same fabric as the iconic Quasar
- Compact pole for ease of packing
- Fully taped flysheet and groundsheet
- Zipped vent hoods
- Magnetic zip flap closure

FOOTPRINT AVAILABLE

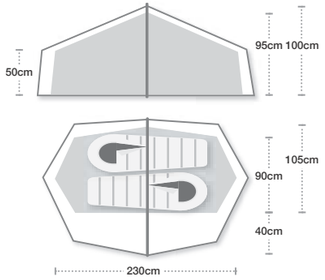

2	1.42kg 3lb 2oz	1.8kg 3lb 15oz	4	30x16cm
SLEEPS	WEIGHT MIN	WEIGHT MAX	SEASON	PACK SIZE

Flysheet	Watershed R/S 5000mm
Floor	Waterbloc 10000mm
Poles	8.7mm DAC NFL
Pegs	14 x Terra Firma 13g
Guylines	8 x Dyneema Reflective
Inner Door	Half Mesh

DAC

GREEN Anodizing

Minimum weight includes flysheet, inner, and main pole.

Code: 43LCAS2

UPDATED Voyager

- A long time favourite for backpackers and trekkers
- **Now supplied with Terra Firma Pegs (P78)**
- Aerodynamic design
- Additional guyline attachment points
- High quality DAC poles
- Fully taped fly and groundsheet

NEW PEGS

FOOTPRINT AVAILABLE

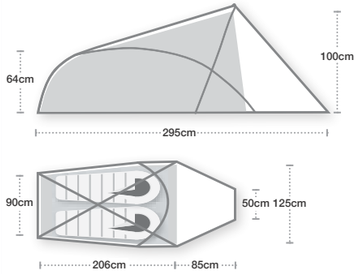

SLEEPS	WEIGHT MIN	WEIGHT MAX	SEASON	PACK SIZE
2	1.88kg 4lb 2oz	2.15kg 4lb 12oz	4	52x13cm

Flysheet	Watershed R/S 5000mm
Floor	Waterbloc 10000mm
Poles	8.7mm DAC NFL
Pegs	12 x Terra Firma 13g
Guylines	2 x Dyneema Reflective
Inner Door	Full Mesh & Solid Door

DAC

GREEN Anodizing

Minimum weight includes flysheet, inner, and main pole.

Code: 41VYG

UPDATED Quasar

- The original geodesic mountain tent, built for long term use
- **Now supplied with Terra Firma Pegs (P78)**
- Extremely strong, proven design
- Fully taped fly and groundsheet
- Expedition heavy duty version available

NEW PEGS

FOOTPRINT AVAILABLE

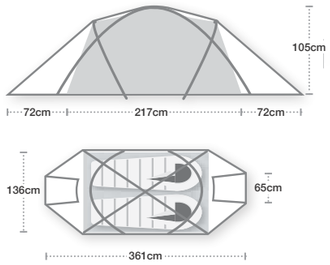

SLEEPS	WEIGHT MIN	WEIGHT MAX	SEASON	PACK SIZE
2	3.16kg 6lb 15oz	3.47kg 7lb 10oz	4	54x18cm

TRAIL GEAR HALL OF FAME

Flysheet	Watershed R/S 5000mm
Floor	Waterbloc 10000mm
Poles	9.5mm TN Reflex
Pegs	22 x Terra Firma 13g
Guylines	6 x Dyneema Reflective
Inner Door	Full Mesh & Solid Door

TERRA NOVA reflex

Minimum weight includes flysheet, inner, and main pole.

Code: 41QUG

Photographer: Stephen Venables

UK Made Expedition Series

Using our most durable flysheet fabrics and made in the UK, this series gives peace of mind to those who may experience severe weather when travelling to the most remote parts of the world.

Expedition Quasar

- The original geodesic mountain tent, built for long term use
- Extremely strong, proven design
- Exceptional waterproofing and a fully taped fly and groundsheet

FOOTPRINT AVAILABLE

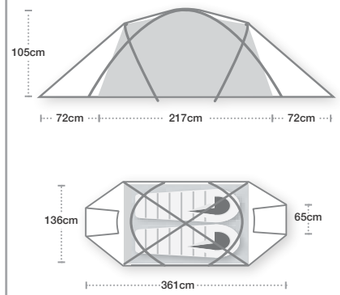

SLEEPS	WEIGHT MIN	WEIGHT MAX	SEASON	PACK SIZE
2	3.9kg 8lb 10oz	4.16kg 9lb 3oz	4	54x18cm

TRAIL GEAR HALL OF FAME

Flysheet	Watershed 7000mm 70D
Floor	Waterbloc 10000mm
Poles	9.5mm TN Reflex
Pegs	22 x Aluminium Alloy
Guylines	6 x Dyneema Reflective
Inner Door	Full Mesh & Solid Door

Available colours: Green, Red

Minimum weight includes flysheet, inner, and main pole.

Code: 41EQU

Expedition Super Quasar

- Exceptionally strong - a great choice for base camps and exposed pitches
- Poles cross at the sides for added stability
- Exceptional waterproofing and a fully taped fly and groundsheet
- Two doors and porches

FOOTPRINT AVAILABLE

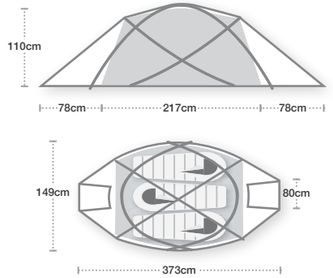

SLEEPS	WEIGHT MIN	WEIGHT MAX	SEASON	PACK SIZE
2-3	4.95kg 10lb 14oz	5.3kg 11lb 11oz	4	54x20cm

Flysheet	Watershed 7000mm 70D
Floor	Waterbloc 10000mm
Poles	9.5mm TN Reflex
Pegs	18 x Aluminium Alloy
Guylines	6 x Dyneema Reflective
Inner Door	Full Mesh & Solid Door

Available colours Green Red

Minimum weight includes flysheet, inner, and main pole.

Code: 41ESQU

Expedition Hyperspace

- A familiar sight on expedition base camps, strong and stable design
- Two doors, one with a large extended porch
- Exceptional waterproofing and a fully taped fly and groundsheet

FOOTPRINT AVAILABLE

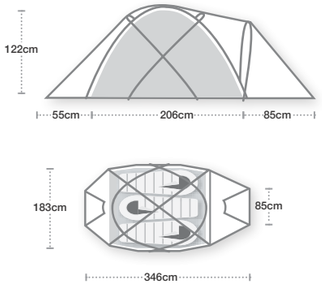

SLEEPS	WEIGHT MIN	WEIGHT MAX	SEASON	PACK SIZE
3	5.2kg 11lb 7oz	5.5kg 12lb 2oz	4	78x18cm

Flysheet	Watershed 7000mm 70D
Floor	Waterbloc 10000mm
Poles	9.5mm TN Reflex
Pegs	18 x Aluminium Alloy
Guylines	8 x Dyneema Reflective
Inner Door	Full Mesh & Solid Door

Available colours Green Red

Minimum weight includes flysheet, inner, and main pole.

Code: 41EHS

Expedition Terra Firma

- Proven on multiple Himalayan and Polar expeditions
- Two doors, both with large extended porches
- Lots of headroom
- Exceptionally waterproof with a taped fly and groundsheet

FOOTPRINT AVAILABLE

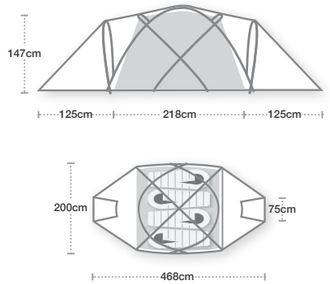

SLEEPS	WEIGHT MIN	WEIGHT MAX	SEASON	PACK SIZE
4	6.35kg 14lb	6.7kg 14lb 12oz	4	78x22cm

Flysheet	Watershed 7000mm 70D
Floor	Waterbloc 10000mm
Poles	11mm / 9.5mm TN Reflex
Pegs	22 x Aluminium Alloy
Guylines	10 x Dyneema Reflective
Inner Door	Full Mesh & Solid Door

Available colours Green Red

Minimum weight includes flysheet, inner, and main pole.

Code: 41ETF

Expedition Cosmos

- The ultimate tent for group and expedition use
- Two main doors and two smaller corner doors
- Closeable flysheet vents
- Exceptionally waterproof with a taped fly and groundsheet
- Standing height in main part of inner

FOOTPRINT AVAILABLE

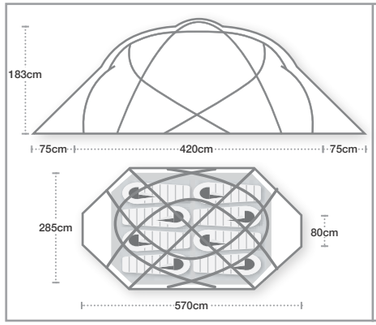

SLEEPS	WEIGHT MIN	WEIGHT MAX	SEASON	PACK SIZE
8	12.9kg 28lb 7oz	14.1kg 31lb 1oz	4	90x35cm

Flysheet	Watershed 7000mm 70D
Floor	Waterbloc 10000mm
Poles	13mm TN Reflex
Pegs	36 x Aluminium Alloy
Guylines	26 x Dyneema Reflective
Inner Door	Full Mesh & Solid Door

Available colours Green Red

Minimum weight includes flysheet, inner, and main pole.

Code: 41ECO

Terra Nova® Tents at a Glance

Ultra Series

Laser Pulse Ultra 1 | Solar Ultra 2 | Voyager Ultra 2

Superlight Series

Laser Pulse 1 | Solar Photon 2

Lightweight Series

Laser Compact 1 | Laser Compact 2 | Starlite 1 | Starlite 2

Classic Series

Southern Cross 1 | Southern Cross 2 | Laser Compact All Season 2 | Voyager | Quasar

UK Expedition Tents

Expedition Quasar | Expedition Super Quasar | Expedition Hyperspace | Expedition Terra Firma | Expedition Cosmos

Terra Nova Tents at a Glance

TERRA NOVA

		metric weights		imperial weights		hydrostatic head (mm)		packed size			
	sleeps	min	max	min	max	flysheet	floor	cms	inches	pegs	poles
LASER PULSE ULTRA 1	1	450g	490g	15.9oz	1lb 1oz	10000	2000	30 x 9	12 x 4	8	1
LASER PULSE 1	1	485g	525g	1lb 1oz	1lb 3oz	1500	2000	30 x 10	12 x 4	8	1
SOLAR ULTRA 2	2	722g	772g	1lb 9oz	1lb 11oz	10000	2000	40 x 13	16 x 5	14	1
VOYAGER ULTRA 2	2	1000g	1050g	2lb 3oz	2lb 5oz	10000	3000	48 x 13	19 x 5	12	3
SOLAR PHOTON 2	2	814g	849g	1lb 12oz	1lb 13oz	2000	3000	40 x 15	16 x 6	14	1
LASER COMPACT 1	1-2	860g	970g	1lb 14oz	2lb 2oz	3000	7000	30 x 14	12 x 5	10	1
LASER COMPACT 2	2	1.08kg	1.23kg	2lb 6oz	2lb 11oz	3000	7000	30 x 15	12 x 6	10	1
STARLITE 1	1	1.0kg	1.12kg	2lb 3oz	2lb 7oz	3000	7000	29 x 10	12 x 4	9	2
STARLITE 2	2	1.36kg	1.53kg	3lb	3lb 6oz	3000	7000	29 x 13	12 x 5	11	2
SOUTHERN CROSS 1	1	1.49kg	1.69kg	3lb 5oz	3lb 11oz	5000	10000	45 x 14	17 x 5	11	2
SOUTHERN CROSS 2	2	2.1kg	2.29kg	4lb 11oz	5lb 1oz	5000	10000	47 x 16	18 x 6	10	2
LASER COMPACT ALL SEASON 2	2	1.42kg	1.7kg	3lb 2oz	3lb 12oz	5000	10000	30 x 16	12 x 7	14	1
VOYAGER	2	1.88kg	2.15kg	4lb 2oz	4lb 12oz	5000	10000	52 x 13	20 x 5	12	3
QUASAR	2	3.16kg	3.47kg	6lb 15oz	7lb 10oz	5000	10000	54 x 18	21 x 7	22	4
EXPEDITION QUASAR	2	3.9kg	4.16kg	8lb 10oz	9lb 3oz	7000	10000	54 x 18	21 x 7	22	4
EXPEDITION SUPER QUASAR	2-3	4.95kg	5.3kg	10lb 14oz	11lb 11oz	7000	10000	54 x 20	21 x 8	18	4
EXPEDITION HYPERSPACE	3	5.2kg	5.5kg	11lb 7oz	12lb 2oz	7000	10000	72 x 18	28 x 7	18	5
EXPEDITION TERRA FIRMA	4	6.35kg	6.7kg	14lb	14lb 2oz	7000	10000	78 x 22	31 x 9	22	6
EXPEDITION COSMOS	8	12.9kg	14.1kg	28lb 7oz	31lb 1oz	7000	10000	90 x 35	35 x 14	36	6

Hydrostatic head is tested to ISO Standards. See page 38 for more information.
Max (packed weight) includes: flysheet, inner tent, poles, pegs and all bags. Min weight includes: flysheet, inner tent and poles.

The Terra Nova FastPack System

The FastPack system is a method of using a Footprint instead of an inner tent and is designed to trim even more weight and bulk from your rucksack. On selected Terra Nova models, it is possible to leave the inner tent behind, if conditions permit, and use a Footprint instead to cover the floor area of the tent. A Footprint must be used if an inner tent is not, to provide the tension and anchor points required by the poles. For the tent models where the FastPack system is possible, footprints are available in the standard footprint fabric. See page 65 for more information about Footprints.

Footprint Weights for FastPack Compatible Tents

	Standard Fabric
Laser Pulse Ultra 1/Laser Pulse 1	217g / 7oz
Laser Compact 1	257g / 9oz
Laser Compact 2	284g / 10oz
Solar Ultra 2/Solar Photon 2	257g / 9oz

Materials and Technology

Terra Nova Equipment has unrivalled expertise in the development of specialist fabrics and materials for its award winning products. The company has always been at the forefront of technical development; it produced the first PU/ Silicone coated flysheet fabric in the 1990s and more recently was the first to use bonded seam technology in commercial tent production.

Our fabrics are specified from the first polymer stage, through to final fabric production. Working together with specialist fabric manufacturers we create exclusive, bespoke fabrics which provide optimal performance for specific tent models.

How fabrics are created

Nylon and polyester fabrics start life as polymer granules. The polymer is heated and extruded to produce an ultra-fine filament. These filaments are twisted together to form a yarn, which is then used to weave the finished fabric. The thickness of each yarn is measured as 'Denier'.

1: Polymer beads

2: 1 yarn showing filament construction

3: Preparation of yarns prior to water jet weaving process

Denier

What is a denier?

Denier is a unit of measurement that is used to determine the fibre thickness of individual threads or yarns used in the creation of textiles. Textiles with a high denier count tend to be thick, sturdy and durable. Textiles with a low denier count tend to be fine and lightweight. Woven fabric used for tent construction is often referred to in terms of denier. 7 or 10 denier are amongst the lightest tent fabrics, 70 or 100 denier fabrics are amongst the most robust tent fabrics. By contrast the human hair is around 20 denier.

How is a denier measured?

Denier is defined as the mass in grammes per 9000m of yarn. Therefore 15 denier yarn weighs 15g per 9000m. The denier measurement originated from a natural reference: a single strand of silk is approximately 1 denier.

Weight and Durability

In the quest for lighter fabrics tear and tensile strength are equally important considerations. To ensure the balance of weight and performance Terra Nova Equipment develops fabrics with:

- An optimised ripstop weave
- Using the best polymer
- Construction providing the best strength to weight ratio

Materials Testing

Terra Nova Equipment tests materials in its own laboratory, in commercial test houses and in the field. A range of tests are carried out on new fabrics, existing fabrics are also subject to regular QA tests.

Tests include:

Water Impermeability

Fabric water resistance

A fabric's ability to resist water penetration is expressed as its resistance to a vertical column of water over a given surface area. This test gives the 'Hydrostatic Head' measurement and is a good indicator of the waterproofing performance of a fabric. So a fabric with a Hydrostatic Head measurement of 3000mm, can support a vertical column of water 3000mm tall, without leaking. There are several test methods, but Terra Nova Equipment uses the ISO method because the applied pressure acts over a larger surface area and is therefore more severe. This gives a better representation of long term performance than a test carried out over a small area such as the Mullen test method, which is preferred in some countries.

Tear, Tensile and Bending Tests

Fabric tensile strength

Tent pole bending test

Our internal test equipment allows us to conduct comprehensive tear and tensile tests for our fabrics when new and after ageing. In addition our 4 point load pole bending apparatus gives valuable feedback concerning the flexing, recovery and ultimate yield strength for all our tent poles.

Weathering Tests

In addition to long term weathering tests outdoors, Terra Nova Equipment also conducts accelerated weathering tests in order to give a complete picture of a fabric's performance.

Some of many fabrics exposed on south facing frames set at 45 degrees

UV Degradation

UV light is one of the major causes of the reduction in flysheet performance. UV light degrades fabrics by cutting the molecular bonds that hold the fabric together. The effect of UV light is reduced in a number of ways:

- UV inhibitors
- Silicone elastomer coating on the outer surface provides additional protection
- Fabric dye colours are selected to give maximum UV resistance

Tents that are subject to a greater degree of UV light, such as base camp tents, have flysheet fabrics specified to provide more UV resistance than backpacking tents which tend to spend less time pitched during daylight hours.

Longevity of fabrics

Long term weathering tests carried out in the laboratory and outside are an important part of the development process. When specifying fabrics Terra Nova Equipment not only looks at the performance of the fabric when it is new, but more importantly how performance can be maintained.

Seam Plus water-resistant seam technology

Overcomes the difficulty of sealing silicone coated fabrics. A unique combination of seam construction and factory applied silicone treatments provides an extremely water resistant seam.

Bonded Seam Construction

Terra Nova Equipment is a pioneer in the use of bonded seams (without sewing) technology and amongst the first to use it on a commercial scale for tents. In tests our bonded seam construction is stronger than the fabric itself. All bonded seam construction takes place in our UK factory.

Fabrics

ULTRA

ULTRA fabric is constructed from a UHMWPE mat, laminated on each side with a very thin high performance polymer film. The UHMWPE patented mat is up to 25% stronger and only half the weight of many traditionally woven siliconised ripstop nylons. The material also retains a higher proportion of its strength and water resistance even after UV weathering exposure. Wherever possible we bond rather than sew ULTRA fabric. Bonding the seams offers higher tensile strength, lighter weight construction, and in long term tests, a high degree of resistance to UV weathering.

Watershed

First developed by Terra Nova Equipment in 1992, Watershed was the first silicone / PU coating hybrid for flysheets, designed to offer enhanced water resistance and withstand better the effects of UV light. Dyestuffs are treated to improve UV protection and UV coating inhibitors help reduce the degrading effects of UV light. Watershed has evolved with a specialist PU coating with extra hydrolysis resistance. This improves water resistance and gives extra grip to seam sealing tape providing a fully waterproof seam. Watershed fabric used in expedition/heavy duty tents has added UV inhibitors and light stabilisers in the coating to provide greater durability.

Watershed Si2

Watershed Si2 is a silicone/silicone coated ripstop nylon flysheet fabric designed to be as light and as strong as possible, for specific end uses. Different constructions, yarn types and fabric weaves are used to provide the best performance for specific tent models. Various weights of fabric are used: 7, 10 and 20 denier in the Superlight and Lightweight Series.

Waterbloc

Waterbloc fabrics, generally used in Terra Nova groundsheets, have been developed to be extremely water resistant. A highly specified PU provides maximum resistance to hydrolysis action. Nylon is widely used for Terra Nova groundsheets and flysheets due to the excellent chemical and mechanical bond it provides with the coating systems. Different weights and weave of fabric are used to provide the best performance for specific tent models.

Poles

DAC Poles

All DAC poles are extruded 7001 aluminium alloy. DAC have created an exclusive derivative called TH72M. After heat treatment to T8 state the finished TH72M alloy gives an excellent balance of strength and stiffness ideally suited to the rigors of tent pole use. DAC NFL are the lightest type of DAC pole. This is achieved by swaging both ends of the pole section. DAC Green Anodising used on NFL poles is a more environmentally friendly anodising process achieved through water recycling and the choice of chemicals.

Terra Nova Reflex Poles

Reflex poles are 7001 T6 extruded aluminium poles specified by Terra Nova Equipment and exclusive to Terra Nova. The diameter of the pole is selected to suit each particular tent model. The colour coded poles have pre-bent sections where appropriate to suit stress conditions and superior anodising treatments to reduce breakages and improve durability. In independent tests Reflex poles have been shown to outperform and outlast other poles, even in extreme conditions. Pole feet are removable, allowing repairs in the field and to reduce corrosive splitting and Dura Cord shock cord won't wither in extreme conditions.

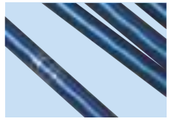

Major Development Milestones

1992	Launch of Watershed – the first PU / silicone coated flysheet fabric in the industry.
2002	Key research in collaboration with Bristol University resulting in renewed focus on the anodisation processes leading to improved tent pole performance.
2004	World's first sub 1kg tent launched – Terra Nova Laser Lite. Guinness World Record for the lightest tent.
2005	Introduction of FLO2 air permeable GORE-TEX® membrane in bivi bags.
2007-2010	3 further Guinness World Records.
2011	First to use ULTRA fabric in commercial tent production.
2012	First to use bonded seams in commercially produced tents with the launch of Terra Nova Voyager Ultra 2.
2014	'Litespeed' lightweight air permeable sleeping bag fabric launched.
2016	Launch of Southern Cross completely free standing 4 season tent. OIA Award Winner.
2017	Starlite range of tents introduced with short packed length, designed for bike packing.
2020	Inflatable tent and awning range launched.

For more information please go to www.terra-nova.co.uk/p/help-advice/materials-and-technology/

Wild Country Tent Range Explained

Specialist Series

Tents developed using more technical materials and designs which are suitable for year round use. Models offer a good balance of space and low weight.

Target User: Those looking for a more technical tent at an attractive price.

Uses: 4 season backpacking, expeditions, trekking. Spacious designs for greater comfort on longer trips.

Classic Series

Tried and tested Wild Country performance.

Target User: The outdoor enthusiast looking for good quality and reliability in an easy to use and affordable tent.

Uses: Backpacking, cycle touring, group use (eg Scouts, Guides, DofE and other youth expeditions), weekend trips, compact family camping.

Core Series

Our introductory series of tents which provide great value for money for occasional or first time campers.

Target User: The more cost conscious camper who requires Wild Country performance but not necessarily all of the frills.

Uses: Backpacking, cycle touring, campsite use.

Series	Specification		
	Flysheet	Groundsheet	Poles
Specialist Series	**N4000Si** **P4000FR** 4000mm HH Nylon/Polyester	**Aqua Stop** **P5000** 5000mm HH Polyester	**Wild Country** Superflex Alloy
Classic Series	**Stormtex** **P4000** 4000mm HH Polyester	**Aqua Stop** **P5000** 5000mm HH Polyester	**Wild Country** Superflex Alloy
Core Series	**Stormtex** **P4000** 4000mm HH Polyester	**Aqua Stop** **P5000** 5000mm HH Polyester	**Wild Country** Superflex Alloy

Easy Pitch, Easy Pack and Compact

Compact Pack Size

Compact versions of Wild Country tent models have a maximum packed length of 30cm making them a really practical offer, fitting easily on bikes and giving more carrying options when backpacking or travelling.

Easy Pitch

Tents are easy to pitch. The flysheet and inner are pegged out together and there is colour coding on the tapes which connect the flysheet and inner together – no more guesswork!

Easy Pack

The side opening bag which includes a tarp on which to place the tent before rolling it in to the bag and closing the drawstring makes packing tents away a quick and easy process.

TENT MODEL	COMPACT	EASY PITCH	EASY PACK
Trisar 2, 2D & 3			✓
Blizzard 2 & 3		✓	✓
Helm Compact 1, 2 & 3	✓	✓	✓
Zephyros Compact 1 & 2	✓	✓	✓
Hoolie Compact 2, 3, 2 ETC & 3 ETC	✓	✓	✓
Coshee Micro, 2 & 3		✓	✓

Specialist Series

Tents in the Specialist Series are developed using more technical materials and designs. They offer a good balance of space and low weight and are for those people looking for a more technical tent at a reasonable price.

Blizzard 2

- 3 pole design for high stability
- Spacious inner tent
- Lightweight model offering good space to weight ratio
- 30d nylon Silicone / PU fabrics by Wild Country
- EASY PITCH ✓
- EASY PACK ✓

FOOTPRINT AVAILABLE

Code: 44BL2V2

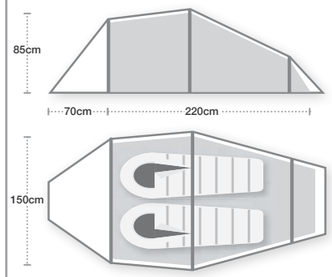

SLEEPS	WEIGHT	SEASON	PACK SIZE
2	2.2kg 4lb 13oz	4	42x15cm

Range	Backpacking/Travelling
Flysheet	Stormtex N4000 Si
Floor	Aqua Stop P5000
Poles	8.5mm WC Superflex Alloy
Pegs	12 x Alloy V Angle 12g
Guylines	8 x Yellow Reflective
Inner Door	Half Mesh

UPDATED Blizzard 3

- **Revised 'easy access' flysheet door**
- 3 pole design for high stability
- Spacious inner tent
- Large porch for kit storage
- Lightweight model offering good space to weight ratio
- 30d nylon Silicone / PU fabrics by Wild Country
- EASY PITCH ✓
- EASY PACK ✓

NEW EASY ACCESS FLYSHEET DOOR

FOOTPRINT AVAILABLE

Code: 44BL3V3

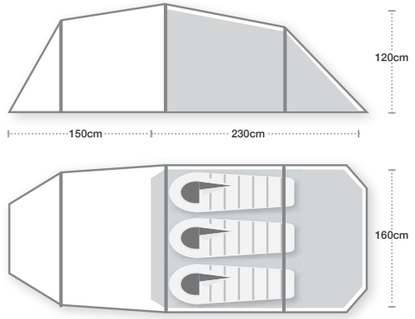

SLEEPS	WEIGHT	SEASON	PACK SIZE
3	2.93kg 6lb 7oz	4	43x18cm

Flysheet	Stormtex N4000Si
Floor	Aqua Stop P5000
Poles	8.5mm Superflex Alloy
Pegs	19 x Alloy 'V' Angle 12g
Guylines	9 x Yellow Reflective
Inner Door	Full Mesh

Trisar 2

- Free-standing design
- Can be pitched without flysheet in good weather conditions
- Inner pitch first
- Lightweight and spacious
- EASY PACK ✓

FOOTPRINT AVAILABLE

Code: 44TR2V2

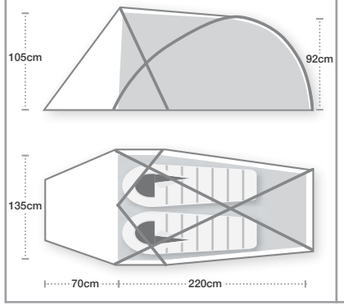

SLEEPS	WEIGHT	SEASON	PACK SIZE
2	2.7kg 5lb 15oz	3-4	42x16cm

Range	Backpacking
Flysheet	Stormtex P4000 FR
Floor	Aqua Stop P5000
Poles	8.5mm Superflex Alloy
Pegs	14 x Alloy 'V' Angle 12g
Guylines	5 x Yellow Reflective
Inner Door	Full Mesh & Solid Door

Trisar 2 D

- Spacious, 2 door option of the popular Trisar style
- Suitable for most outdoor environments
- 4 season design ideal for expedition use
- Inner pitch first
- EASY PACK ✓

Code: 44TR2D2

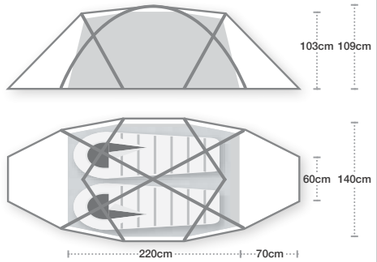

SLEEPS	WEIGHT	SEASON	PACK SIZE
2	3.6kg 7lb 15oz	4	50x18cm

Range	Backpacking
Flysheet	Stormtex P4000 FR
Floor	Aqua Stop P5000
Poles	8.5mm Superflex Alloy
Pegs	18 x Alloy 'V' Angle 12g
Guylines	10 x Yellow Reflective
Inner Door	2 x Full Mesh & Solid Door

Classic Series

Tried and tested Wild Country performance.
Easy to use models provide good quality and reliability.

Helm Compact 1

- Free-standing design
- Spacious Inner and generous porch
- Rear storage area under flysheet accessed from inner
- Excellent ventilation in inner and flysheet
- EASY PITCH ✓
- EASY PACK ✓
- COMPACT ✓

FOOTPRINT AVAILABLE

Code: 44HEC10

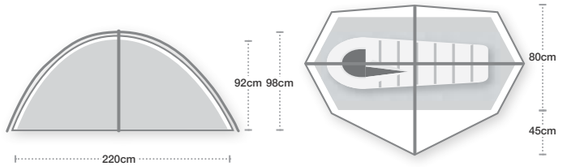

SLEEPS	WEIGHT	SEASON	PACK SIZE
1	1.97kg 4lb 5oz	3	30x17cm

Flysheet	Stormtex P4000 FR
Floor	Aqua Stop P5000
Poles	8.5mm WC Superflex Alloy
Pegs	12 x Alloy 'V' Angle 12g
Guylines	4 x Yellow Reflective
Inner Door	Half Mesh

Helm Compact 2

- Free-standing design
- Spacious inner and generous porches
- 2 doors and porches
- Excellent ventilation in inner and flysheet
- EASY PITCH ✓
- EASY PACK ✓
- COMPACT ✓

FOOTPRINT AVAILABLE

Code: 44HEC20

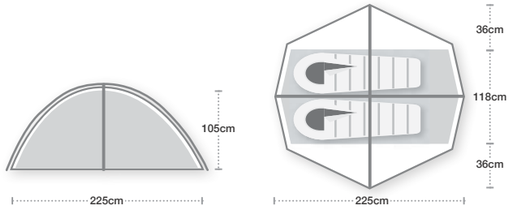

SLEEPS	WEIGHT	SEASON	PACK SIZE
2	2.35kg 5lb 3oz	3	32x21cm

Flysheet	Stormtex P4000 FR
Floor	Aqua Stop P5000
Poles	8.5mm Superflex Alloy
Pegs	12 x Alloy 'V' Angle 12g
Guylines	4 x Yellow Reflective
Inner Door	Half Mesh

WILD COUNTRY by Terra Nova

Helm Compact 3

- Free-standing design
- Pitches outer first (flysheet and inner together)
- Spacious inner and generous porches
- 2 doors and porches
- Excellent ventilation in inner and flysheet

- EASY PITCH ✓
- EASY PACK ✓
- COMPACT ✓

FOOTPRINT AVAILABLE

Code: 44HEC30

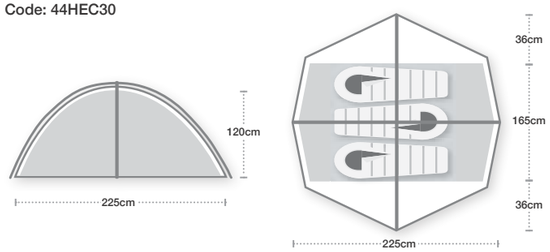

3	2.95kg 6lb 8oz	3	32x24cm
SLEEPS	WEIGHT	SEASON	PACK SIZE

Flysheet	Stormtex P4000 FR
Floor	Aqua Stop P5000
Poles	8.5mm Superflex Alloy
Pegs	12 x Alloy 'V' Angle 12g
Guylines	4 x Yellow Reflective
Inner Door	Half Mesh

Zephyros Compact 1

- Vents at each end of flysheet and inner
- Pitches ‘as one’ quickly and easily
- Stable tunnel design
- Proven design
- EASY PITCH ✓
- EASY PACK ✓
- COMPACT ✓

FOOTPRINT AVAILABLE

Code: 44ZC1V3

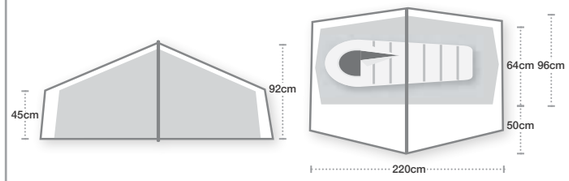

SLEEPS	WEIGHT	SEASON	PACK SIZE
1	1.65kg 3lb 10oz	3	30x18cm

Range	Backpacking
Flysheet	Stormtex P4000 FR
Floor	Aqua Stop P5000
Main Pole	8.5mm WC Superflex Alloy
End Pole	8mm WC Superflex Alloy
Pegs	10 x Alloy ‘V’ Angle 12g
Guylines	4 x Yellow Reflective
Inner Door	Half Mesh

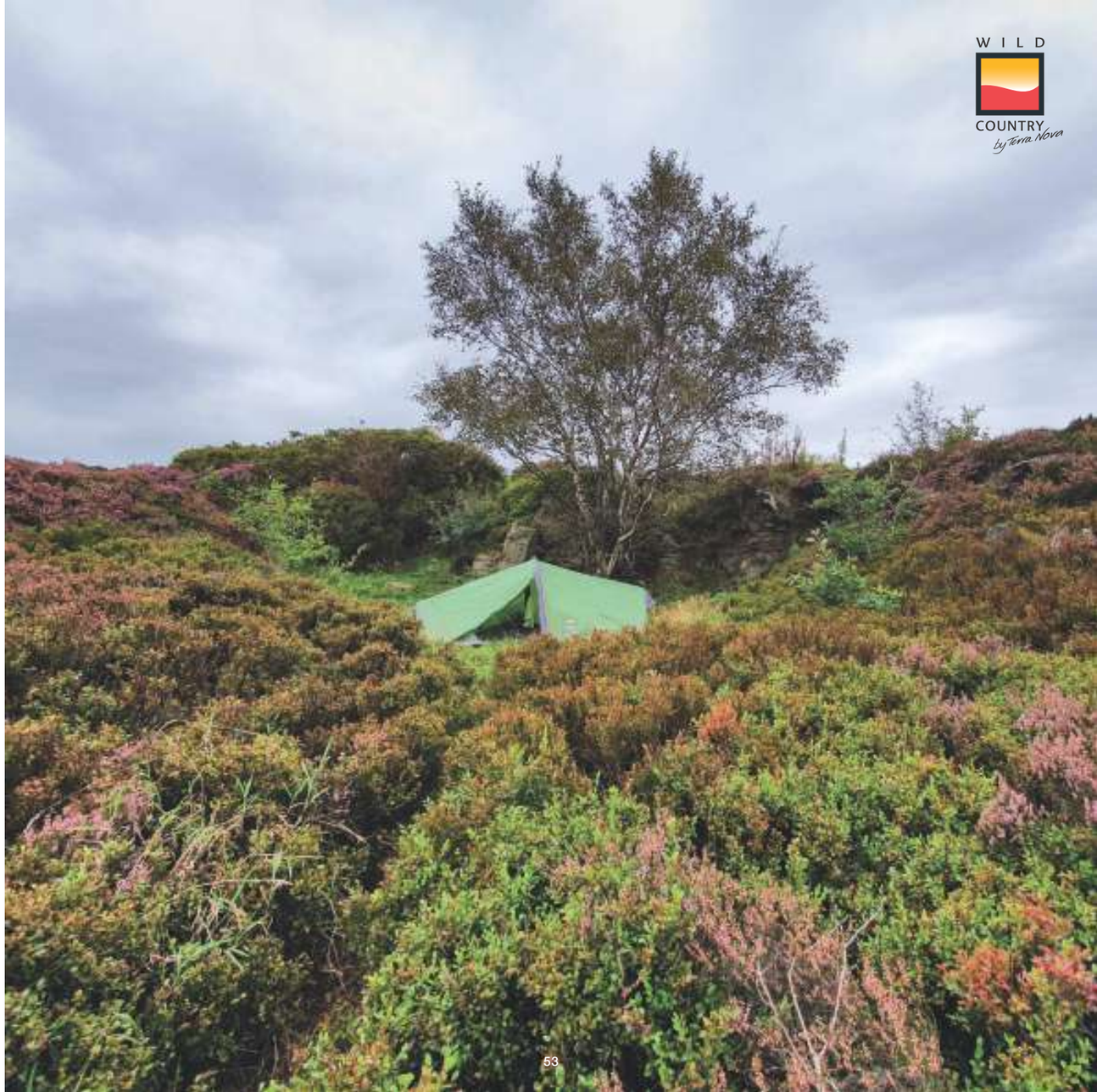

Zephyros Compact 2

- Vents at each end of flysheet and inner
- Two doors
- Pitches ‘as one’ quickly and easily
- Stable tunnel design
- Proven design
- EASY PITCH ✓
- EASY PACK ✓
- COMPACT ✓

FOOTPRINT AVAILABLE

Code: 44ZC2V3

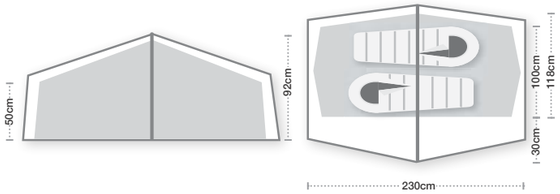

2	1.95kg 4lb 3oz	3	30x19cm
SLEEPS	WEIGHT	SEASON	PACK SIZE

T3 AWARDS 2020 BEST TENT

Range	Backpacking
Flysheet	Stormtex P4000 FR
Floor	Aqua Stop P5000
Main Pole	8.5mm WC Superflex Alloy
End Pole	8mm WC Superflex Alloy
Pegs	10 x Alloy ‘V’ Angle 12g
Guylines	4 x Yellow Reflective
Inner Door	Half Mesh

Hoolie Compact 2

- Simple and easy to pitch
- Superflex T6 alloy poles for strength and durability
- Great ventilation for comfort
- Large porch space for storage
- EASY PITCH ✓
- EASY PACK ✓
- COMPACT ✓

FOOTPRINT AVAILABLE

Code: 44HC2V2

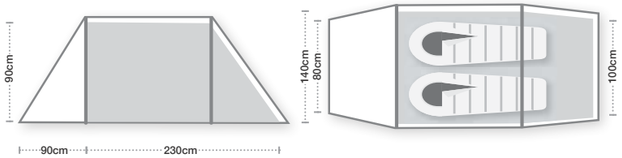

2	2.50kg 5lb 8oz	3	30x19cm
SLEEPS	WEIGHT	SEASON	PACK SIZE

BEST IN TEST TREKMOUNTAIN

Flysheet	Stormtex P4000 FR
Floor	Aqua Stop P5000
Poles	8.5mm Superflex Alloy
Pegs	15 x Alloy ‘V’ Angle 12g
Guylines	8 x Yellow Reflective
Inner Door	Half Mesh

Hoolie Compact 3

- Simple and easy to pitch
- Superflex T6 alloy poles for strength and durability
- Great ventilation for comfort
- Large porch space for storage
- EASY PITCH ✓
- EASY PACK ✓
- COMPACT ✓

FOOTPRINT AVAILABLE

Code: 44HC3V3

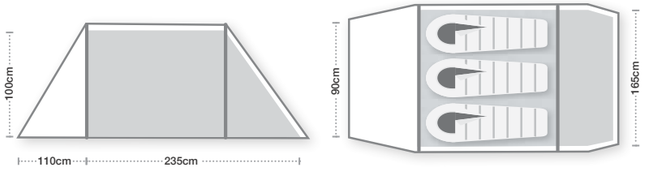

3	3.0kg 6lb 10oz	3	30x21cm
SLEEPS	WEIGHT	SEASON	PACK SIZE

Flysheet	Stormtex P4000 FR
Floor	Aqua Stop P5000
Poles	8.5mm Superflex Alloy
Pegs	17 x Alloy ‘V’ Angle 12g
Guylines	8 x Yellow Reflective
Inner Door	Half Mesh

UPDATED Hoolie Compact 2 ETC

- **Revised 'easy access' flysheet door**
- Simple and easy to pitch
- Superflex T6 alloy poles for strength and durability
- Great ventilation for comfort
- Large porch space for storage
- EASY PITCH ✓
- EASY PACK ✓
- COMPACT ✓

NEW EASY ACCESS FLYSHEET DOOR

FOOTPRINT AVAILABLE

Code: 44HC2EV2

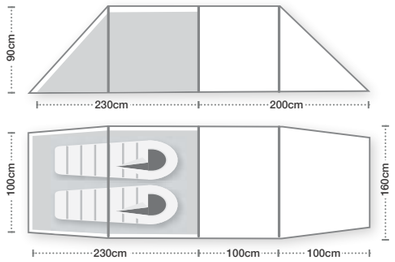

SLEEPS	WEIGHT	SEASON	PACK SIZE
2	3.15kg 6lb 15oz	3	30x22cm

Flysheet	Stormtex P4000 FR
Floor	Aqua Stop P5000
Poles	8.5mm Superflex Alloy
Pegs	21 x Alloy 'V' Angle 12g
Guylines	10 x Yellow Reflective
Inner Door	Half Mesh

UPDATED Hoolie Compact 3 ETC

WILD COUNTRY by Terra Nova

- **Revised 'easy access' flysheet door**
- Simple and easy to pitch
- Superflex T6 alloy poles for strength and durability
- Great ventilation for comfort and side door
- Extra large porch space for storage
- EASY PITCH ✓
- EASY PACK ✓
- COMPACT ✓

NEW EASY ACCESS FLYSHEET DOOR

FOOTPRINT AVAILABLE

Code: 44HC3EV2

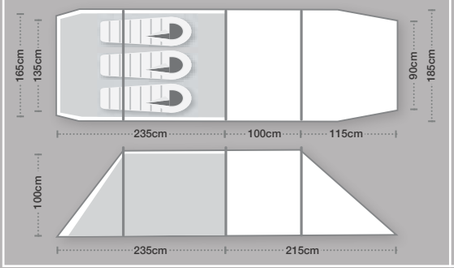

SLEEPS	WEIGHT	SEASON	PACK SIZE
3	3.8kg 8lb 6oz	3	30x24cm

Flysheet	Stormtex P4000 FR
Floor	Aqua Stop P5000
Poles	8.5mm Superflex Alloy
Pegs	23 x Alloy 'V' Angle 12g
Guylines	10 x Yellow Reflective
Inner Door	Half Mesh

Core Series

The Core Series truly represents great value for money for occasional or first time campers. Models are easy to pitch and have a small pack size making them an indispensable part of your camping equipment.

Coshee Micro

- Compact starter tent for 1
- Use as a deluxe bivi
- Low wind cheating shape for good weather protection
- Superflex T6 alloy poles
- Low weight/small pack size
- EASY PITCH ✓
- EASY PACK ✓

FOOTPRINT AVAILABLE

Code: 44CMV2

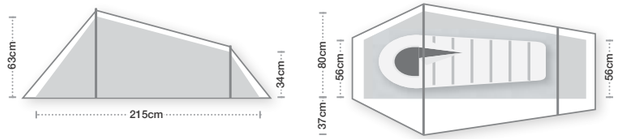

1	1.4kg 3lb 1oz	2	36x14cm
SLEEPS	WEIGHT	SEASON	PACK SIZE

Flysheet	Stormtex P4000 FR
Floor	Aqua Stop P5000
Poles	8.5mm Superflex Alloy
Pegs	7 x Alloy ‘V’ Angle 12g
Guylines	2 x Yellow Reflective
Inner Door	Half Mesh

Coshee 2

- Great value
- Weather cheating profile
- Superflex T6 alloy poles
- Great ventilation for comfort
- 2 doors for easy access
- Low weight/small pack size
- EASY PITCH ✓
- EASY PACK ✓

FOOTPRINT AVAILABLE

Code: 44C2V20

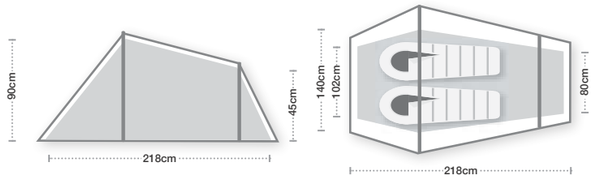

2	2.10kg 4lb 10oz	3	42x15cm
SLEEPS	WEIGHT	SEASON	PACK SIZE

Flysheet	Stormtex P4000 FR
Floor	Aqua Stop P5000
Poles	8.5mm Superflex Alloy
Pegs	10 x Alloy 'V' Angle 12g
Guylines	4 x Yellow Reflective
Inner Door	Half Mesh

Coshee 3

- Great value
- Weather cheating profile
- Superflex T6 alloy poles
- Great ventilation for comfort
- 2 doors for easy access
- Low weight/small pack size
- EASY PITCH ✓
- EASY PACK ✓

FOOTPRINT AVAILABLE

Code: 44C3V20

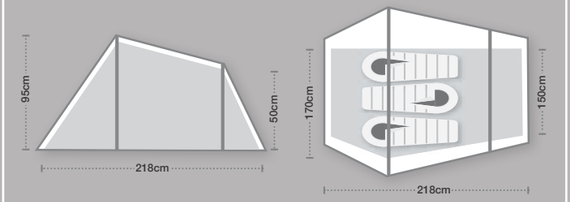

3	2.6kg 5lb 11oz	3	42x17cm
SLEEPS	WEIGHT	SEASON	PACK SIZE

Flysheet	Stormtex P4000 FR
Floor	Aqua Stop P5000
Poles	8.5mm Superflex Alloy
Pegs	10 x Alloy 'V' Angle 12g
Guylines	4 x Yellow Reflective
Inner Door	Half Mesh

Wild Country Tents at a Glance

Specialist Series

Blizzard 2

Blizzard 3

Trisar 2

Trisar 2 D

Classic Series

Zephyros Compact 1

Zephyros Compact 2

Helm Compact 1

Helm Compact 2

Helm Compact 3

Hoolie Compact 2

Hoolie Compact 3

Hoolie Compact 2 ETC

Hoolie Compact 3 ETC

Core Series

Coshee Micro

Coshee 2

Coshee 3

Wild Country Tents at a Glance

		weight		hydrostatic head (mm)		packed size			
	sleeps	metric	imperial	flysheet	floor	cms	inches	pegs	poles
BLIZZARD 2	2	2.2kg	4lb 13oz	4000	5000	42 x 15	16 x 6	12	3
BLIZZARD 3	3	2.93kg	6lb 7oz	4000	5000	43 x 18	17 x 7	19	3
TRISAR 2	2	2.7kg	5lb 15oz	4000	5000	42 x 16	16 x 6	18	3
TRISAR 2 D	2	3.6kg	7lb 15oz	4000	5000	50 x 18	19 x 7	18	4
HELM COMPACT 1	1	1.97kg	4lb 5oz	4000	5000	30 x 17	12 x 7	10	2
HELM COMPACT 2	2	2.35kg	5lb 3oz	4000	5000	32 x 21	13 x 8	10	2
HELM COMPACT 3	3	2.95kg	6lb 8oz	4000	5000	32 x 24	13 x 9	14	2
ZEPHYROS COMPACT 1	1	1.65kg	3lb 10oz	4000	5000	30 x 18	12 x 7	10	1
ZEPHYROS COMPACT 2	2	1.95kg	4lb 3oz	4000	5000	30 x 19	12 x 7	10	1
HOOLIE COMPACT 2	2	2.50kg	5lb 8oz	4000	5000	30 x 19	12 x 7	15	2
HOOLIE COMPACT 3	3	3kg	6lb 10oz	4000	5000	30 x 21	12 x 8	17	2
HOOLIE COMPACT 2 ETC	2	3.15kg	6lb 15oz	4000	5000	30 x 22	12 x 8	21	3
HOOLIE COMPACT 3 ETC	3	3.8kg	8lb 6oz	4000	5000	30 x 24	12 x 9	23	3
COSHEE MICRO	1	1.4kg	3lb 1oz	4000	5000	36 x 14	14 x 5	7	2
COSHEE 2	2	2.10kg	4lb 10oz	4000	5000	42 x 15	16 x 5	10	2
COSHEE 3	3	2.6kg	5lb 11oz	4000	5000	42 x 17	16 x 6	10	2

Tent Fabrics and Technology

The same thought and understanding goes into the development of fabrics for use in the Wild Country® range as the Terra Nova® range.

Stormtex N4000Si

Stormtex N4000Si fabrics are nylon based with a PU / silicone coating for maximum water resistance. The 30 denier ripstop construction is 20% lighter than Stormtex P4000 fabrics allowing tent volume to be maintained but weight to be decreased, offering a better space to weight ratio. Being PU coated the fabric can be taped to provide a fully waterproof seam.

Stormtex P4000

Stormtex P4000 fabrics used in Wild Country® tents, have been developed to provide the best performance for the conditions the tents are designed to face. The fabrics are polyester and have a PU / DWR coating to improve water resistance and allow taping, so a fully waterproof seam can be offered. Fabrics tested to the CPAI84 standard for flame retardancy are indicated as fire resistant. Different weights and weave of fabric are used to provide the best performance for specific tent models.

Aqua Stop

Aqua Stop fabrics are polyester and designed to be strong and hardwearing underfoot, whilst maintaining a high level of water resistance.

Poles

Superflex Poles

Superflex poles are 7001 T6 extruded aluminium poles for use in Wild Country® tents. The diameter of the pole is selected to suit each particular tent model. The colour-coded poles have pre-bent sections where appropriate to suit stress conditions and superior anodising treatments to reduce breakages and improve durability.

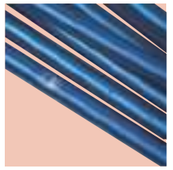

Fabric being woven

Guaranteed waterproof flysheet.

Tents marked with this logo are guaranteed waterproof from purchase. This is achieved by factory taping the seams or by providing a waterproof hood over pole seams. Please note that where a waterproof hood is provided these tents may have unprotected seams and zips, but are innovatively designed so that rainwater will not drip into or onto the inner. Our lightweight tents are designed to minimise seams.

We have a skilled UK manufacturing and repair facility at our Derbyshire base. All products in this workbook with the Union Jack logo are made in the UK. As well as producing standard products in our range, our specialist facility produces bespoke versions of our tents, such as heavy duty and white options for contract use. Please contact us for details.

Footprints

Footprints are designed to protect your tent groundsheet from wear and tear, moisture and dirt, and are custom-fitted for each tent model. It covers the area of ground covered by the tent (i.e. the inner and porch area). Although we use the highest specification of waterproof and durable fabric in all of our tent groundsheets, using a Footprint (sold separately) helps to prolong the life of a tent by reducing wear and tear on the fabric. Using a Footprint also keeps the tent underside clean and reduces the amount of moisture and grit that gets packed along with the tent. It is also much easier to dry and clean a Footprint than the whole tent.

Photographer: Anna Sharpe

Bivi Bags

Terra Nova® bivi bags use the best materials to suit their use, whether it is an overnight in moderate conditions or for more extreme conditions. Whatever your trip, there is a bivi in our range to suit you.

Survival Bivi

- Waterproof and breathable sleeping bag cover
- Great value
- Small pack size
- Terra Nova Dusk fabric

Code: 52SB

Moonlite Bivi

BEST IN CLASS

210g

- Waterproof and breathable sleeping bag cover
- Seam sealed
- Half moon foot
- Drawstring closure
- Tiny pack size
- Mosquito net screen
- Terra Nova Moonlite fabric
- Colour: Green with black mesh

Code: 52ML

UPDATED Jupiter Lite Bivi

- Lightweight, waterproof and highly breathable
- **Now supplied with Terra Firma Mini Pegs (P78)**
- For minimalist backpacking
- Single pre-curved aluminium alloy pole gives extra head room and improved ventilation
- Good ventilation makes it suitable for warmer, more humid conditions
- No-see-um mesh door to keep out bugs
- Terra Nova Moonlite fabric and Waterbloc groundsheet

DAC GREEN Anodizing

Code: 52JL

Coshee Micro

- Deluxe bivi
- Low wind cheating shape for good weather protection
- Copious porch space and 1 door
- Superflex T6 alloy poles
- Low weight/small pack size
- For more information see page 69

Code: 44COMV20

TERRA NOVA

Bivi Fabrics and Technology

Bivi Bag Fabrics

Moonlite

A lightweight, waterproof and highly breathable fabric. At only 55gsm, giving 10m Hydrostatic Head, and a breathability minimum of 15,000 g/sqm/24hrs, this laminated nylon ripstop is perfect for our Moonlite bivi.

Dusk

A mid weight, waterproof and breathable fabric. With a weight of 75gsm, 10m HH and good level of breathability this ripstop nylon is a tough all round performer for our Survival bivi.

Guaranteed waterproof flysheet.
Products marked with this logo are guaranteed waterproof from purchase. This is achieved by factory taping the seams.

Bivi Bags at a Glance

Sleeping Bag Covers

Survival Bivi

Moonlite Bivi

Bivis with Poles

Jupiter Lite Bivi

Coshee Micro

	Survival Bivi	Moonlite Bivi	Jupiter Lite	Coshee Micro
Size	215 x 74cm	200 x 76cm	230 x 70 x 45cm	215 x 117cm
Packed Size	21 x 11cm	21 x 6cm	40 x 11cm	36 x 14cm
Weight	340g / 12oz	210g / 7oz	770g / 11lb 11oz	1.2kg/2lb 10oz
Upper Fabric	TN DUSK	TN Moonlite	TN Moonlite	Stormtex P4000 FR
Hydrostatic Head	10000mm	10000mm	10000mm	4000mm
Groundsheet Fabric	TN DUSK 10000mm	TN Moonlite 10000mm	Waterbloc 10000mm	Aqua Stop P6000

Tarps

Our comprehensive Tarp range offers lightweight summer shelter options in a range of sizes. Suitable for use with bivi bags, they are a great minimalist alternative to a tent.

Tarp Ultra 1

- Lightest weight tarp
- Reinforced eyelet positions and webbing tapes for flexible set up
- Ideal for use with Moonlite Bivi
- Uses extremely lightweight ULTRA fabric
- Poles not included

Code: 43TU1

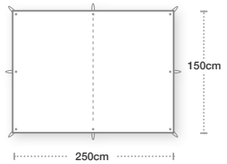

Competition Tarp 1 & 2

- Available in 2 size options
- Reinforced eyelet positions and webbing tapes for flexible set up
- Ideal for use with Moonlite or Discovery Bivi
- Uses Watershed Si2 fabic (same as Laser Competition)
- Poles not included

Code: 43CT1, 43CT2

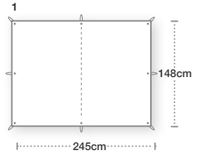

Adventure Tarp 1 & 2

- Available in 2 size options
- Reinforced eyelet positions and webbing tapes for flexible set up
- Ideal for use with Survival Bivi
- Uses Stormtex P4000FR fabric (same as Zephyros and Hoolie models)
- Poles not included

Code: 43ATC1, 43ATC2

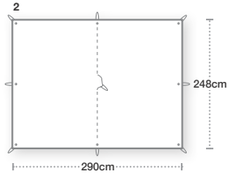

Tarps at a Glance

Flat Tarps

Tarp Ultra 1

Competition Tarp 1 & 2

Adventure Tarp 1 & 2

	Size (metric)	Size (imperial)	Packed Size (metric)	Packed Size (imperial)	Weight	Fabric	HH & Substrate
Tarp Ultra 1	2.5m x 1.5m	9'2" x 5'	13 x 10 x 5cm	5" x 4" x 2"	86g / 3oz	ULTRA	10000mm
Competition Tarp 1	2.45m x 1.48m	9' x 4'10"	13 x 10 x 5cm	5" x 4" x 2"	290g / 10.2oz	Watershed Si2	Nylon 3000mm
Competition Tarp 2	2.9m x 2.48m	9'6" x 8'2"	13 x 10 x 5cm	5" x 4" x 2"	550g / 19.5oz	Watershed Si2	Nylon 3000mm
Adventure Tarp 1	2.45m x 1.48m	9' x 4'10"	15 x 15 x 7cm	6" x 6" x 2.5"	367g / 12.9oz	Stormtex P4000	Polyester 4000mm
Adventure Tarp 2	2.9m x 2.48m	9'6" x 8'2"	15 x 15 x 7cm	6" x 6" x 2.5"	671g / 23.6oz	Stormtex P4000	Polyester 4000mm

Bothy Bags

Used by mountain leaders, rescue organisations, backcountry skiers and canoe guides all over the world, these indispensable lightweight emergency shelters allow the users to create a 'microclimate' that is warm and dry - perfect for map reading, group discussions or even as a morale booster for wet lunch breaks.

DID YOU KNOW…

Bothy comes from the 18th century of Irish and Scottish Gaelic descent. It means hut or small cottage and used as a mountain refuge.

Bothy 2

Bothy 4

- Range of sizes
- Mesh vents
- Roof 'sockets' to use walking poles as extra support
- PU welded windows suitable for temperatures as low as -30°C

	Packed Size:	Weight:
2 person	22cm x 11.5cm	370g / 14oz
4 person	27cm x 11cm	600g / 21oz
8 person	30cm x 14cm	940g / 33oz
12 person	33cm x 16cm	1410g / 50oz

Code: 53B

Bothy 8

Bothy 12

Tent Accessories

Pegs

1g Titanium

1g Ti Pegs, as seen on: ULTRA tents

Hold well for their size in good ground, can be doubled up and still be lighter than most other pegs.
Length 13cm.
Available in packs of 6

Code: 50PEGSTI1

2g Titanium

Hold well for their size in good ground, can be doubled up and still be lighter than most other pegs.
Length 13cm.
Available in packs of 6

Code: 50PEGSTI2

11g Superlite Ti 'V' Angle Peg

Increased surface area for a minimal weight penalty, great for critical load bearing points.

Length 15cm.

Available in packs of 6

Code: 50PEGT10

18g Ti 'V' Angle Peg

Great holding power for superlite travellers. Essential for pitching on sandy or loose ground.

Length 15cm.

Available in packs of 6

Code: 50PEGT18

12g Alloy 'V' Angle Peg

The standard peg for Specialist and Classic Series Wild Country tents. A firm hold and beaded for extra strength. Now supplied in mesh bag.

Length 16cm.

Available in packs of 10

Code: 50PEGAV10

TN Alloy Peg

TN Alloy peg - 11g, as seen on: Lightweight and Classic Series Terra Nova® tents. Made from high grade 7075 aluminium for continual use.

Length 17cm

Available in packs of 10

Code: 50PEGS

Pegs

SOS Stake

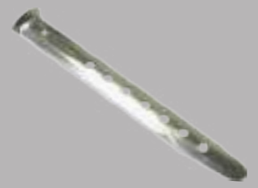

Sand Or Snow (SOS) peg - 35g

Huge aluminium stakes with a curved profile. 35mm wide – can be buried sideways or used traditionally.

Length 35cm

Available in packs of 10

Code: 50SOS

Terra Firma Peg

- 7075 alloy
- Y profile peg for a firmer hold
- 13g per peg
- Supplied in mesh bag

Length 18cm

Available in packs of 6

Code: 50TFTP18

Terra Firma Mini Peg

- 7075 alloy
- Y profile peg for a firmer hold
- 9g per peg
- Supplied in mesh bag

Length 15cm

Available in packs of 6

Code: 50TFMTP15

Tent Care

Footprints

- Available for Terra Nova and Wild Country models
- Specific to each tent model
- Covers the area under the inner tent and porch
- Protects the tent groundsheet
- Terra Nova: 70D Nylon, 10,000mm
- Wild Country: 68D Polyester, 5,000mm

See pricelist

Emergency Repair Kit

Code: 50ERK

Spares and Add-ons

Reflective Guy Ropes

Pack of 2x2m lengths guyline & clamcleats

Code: Thin: 50TSGCAMS
Thick: 50TSGCAM

Clamcleats

Pack of 6. Large 3cm long. Small 2cm long.

Code: Large: 50TSCAM
Small: 50TSCAMS

Tent Bags

Extra or replacement (sizes XS, S, M, L)

Code: 49TBAG

Dead Guy

Weight with stones or sand.

Code: 50TSDGUY

Pole Repair Sleeve

Fits poles up to 11mm diameter. Can be used to extract pole end tips for Southern Cross and Starlite models.

Code: 49PSLE

The Loft

2 storage pockets fits selected tent models

Code: 50LOFT

Trekking Poles

Terra Nova trekking poles have been designed to be as light as possible. Their low weight means you burn less energy using them, making more energy available to enjoy your chosen activity. We use 7075 aluminium because of its high strength-to-weight ratio – it is the lightest available but extremely strong and durable.

UPDATED Trail Elite

Folding, compact trekking pole which easily adjusts to your required length but packs down small for carrying in a rucksack.

- 3 section folding pole with clip locks enabling easy adjustment
- Made with 7075 aluminium alloy
- Lightweight and comfortable EVA handle and soft wrist strap
- Removable trekking basket
- Tungsten tip with protective rubber ferrule

Weight	Maximum Adjustable Length	Packed Length
274g / 9.5oz	130cm / 51”	37cm /14”

Code: 57TEP

Technical Information

Aluminium 7075 Poles

7075 aluminium alloy is the lightest and highest strength alloy available. Its high tensile strength allows a thinner walled, and therefore lighter, tube to be produced which has the same strength. Low weight means less energy is burned using them, making more energy available for the activity.

Clip Lock System

Clip locks provide a more secure locking mechanism than a twist system and allow the pole length to be quickly and easily altered. A screw adjustment is also included to change the strength of closure, ensuring a secure lock each time.

Tungsten Carbide End Tips

Terra Nova trekking poles have tungsten carbide end tips. Tungsten carbide is extremely hard and very abrasion resistant. These properties make it ideal for the end of trekking poles, which are constantly striking hard ground. End tips made from tungsten carbide will last longer than those made of alternative materials.

Sales Support

Tent pitching videos

Tent pitching videos demonstrate how to pitch a specific model but also include internal shots and highlight key features. They are designed to help customers pitch the tent correctly once they have made a purchase, but are also a good pre sales tool, providing customers with a good overview of the structure of the tent and its size. The videos are hosted on our youtube channels **www.youtube.com/terranovaequipment** and **/wildcountrytents** which can be linked to your own website.

Tent specification cards

Tent specification cards, which are ideal to display with a pitched model or compile as a catalogue in store, are available for all models. These can be downloaded from www.terra-nova.co.uk on the relevant product page or via Dropbox link.

Tent training videos

Tent training videos provide retail sales staff with a good overview of each model. They will enable staff to identify the most appropriate tent for individual customers and answer questions confidently about the Terra Nova® and Wild Country® models. Videos cover key points, target users and features and benefits.

Videos are hosted on our YouTube channels. They are therefore available to watch at a time that suits the individual and more than once if a training refresher is required. Please ask your account manager for details of how to access the training videos.

Beach Flags

For use indoors, can be pegged down for outside use.

200cm high

Codes: 98BEACHFLAGWC
98BEACHFLAGTN

Please contact your account manager if you would like to order POS material.

Fabric Banners

100cm wide

TERRA NOVA®

Code: 98FABRICBANTN

WILD COUNTRY by Terra Nova

Code: 98FABRICBANWC

Header Boards for slat walling

64cm x 20cm

TERRA NOVA®

WILD COUNTRY by Terra Nova

Codes: 98HEADTNEL
98HEADWC

TERRA NOVA EQUIPMENT LIMITED
Hubaco House, Railway View, Clay Cross, Chesterfield S45 9FR
Main: +44(0)1773 833300 Sales: +44(0)1773 837370 Email: salesoffice@terra-nova.co.uk
www.terra-nova.co.uk www.wild-country.co.uk

@terranovaequipment @terranovaequip @terranovaequipment

www.youtube.com/terranovaequipment
www.youtube.com/wildcountrytents

This is a product guide designed for pre-selling Terra Nova® and Wild Country™ 2022 products. Due to the selling in process not all styles / colours may be available in 2022. Due to continual product development, specifications may change between the production of this guide and delivery of goods. If you would like to confirm details before placing orders, please contact us using the details above.